NM-TC100BLACK

NEOMOUNTS NUC/THIN CLIENT HOLDER

SPECIFICATIONS

GENERAL

Min. weight	0 kg (per screen)
Max. weight	5 kg (per screen)
VESA minimum	50x50 mm
VESA maximum	100x100 mm

FUNCTIONALITY

Type	Fixed
Height adjustment	13,8 cm
Width adjustment	1,7-7 cm

INFORMATION

Color	Black
Main material	Steel
Warranty	5 year
EAN code	8717371445737

*Please note: The inch sizes stated are just an indication, combined with the weight and VESA sizes. The maximum weight and VESA size are absolute restrictions for the products and should not be exceeded.

Neomounts Thin Client Holder (attach between monitor and mount) - Black

The Neomounts thin client mount, model NM-TC100BLACK, allows you to mount a thin client computer to a monitor mount. A thinclient mount creates a need and clean desk because its stored behind the monitor and doesn't use any valuable desk space. Increase the lifetime of your computer due to reduction intake dust and dirt. Keep the workplace clean without computers on the desk.

This Neomounts thin client mount allows vertical installation of thin client computer between the screen and monitor mount. This product includes VESA 50/75/100 hole pattern to simplify installation with flat screens and flat screen mounts. Hide your cables and keep the workplace nice and tidy.

Easy to adjust in width and depth to fit most thin client PCs. The specifications listed show maximum and minimum width and depth of the mount.

All installation material is included with the product.

Neomounts®

NM-TC100BLACK **NEOMOUNTS NUC/THIN CLIENT HOLDER**

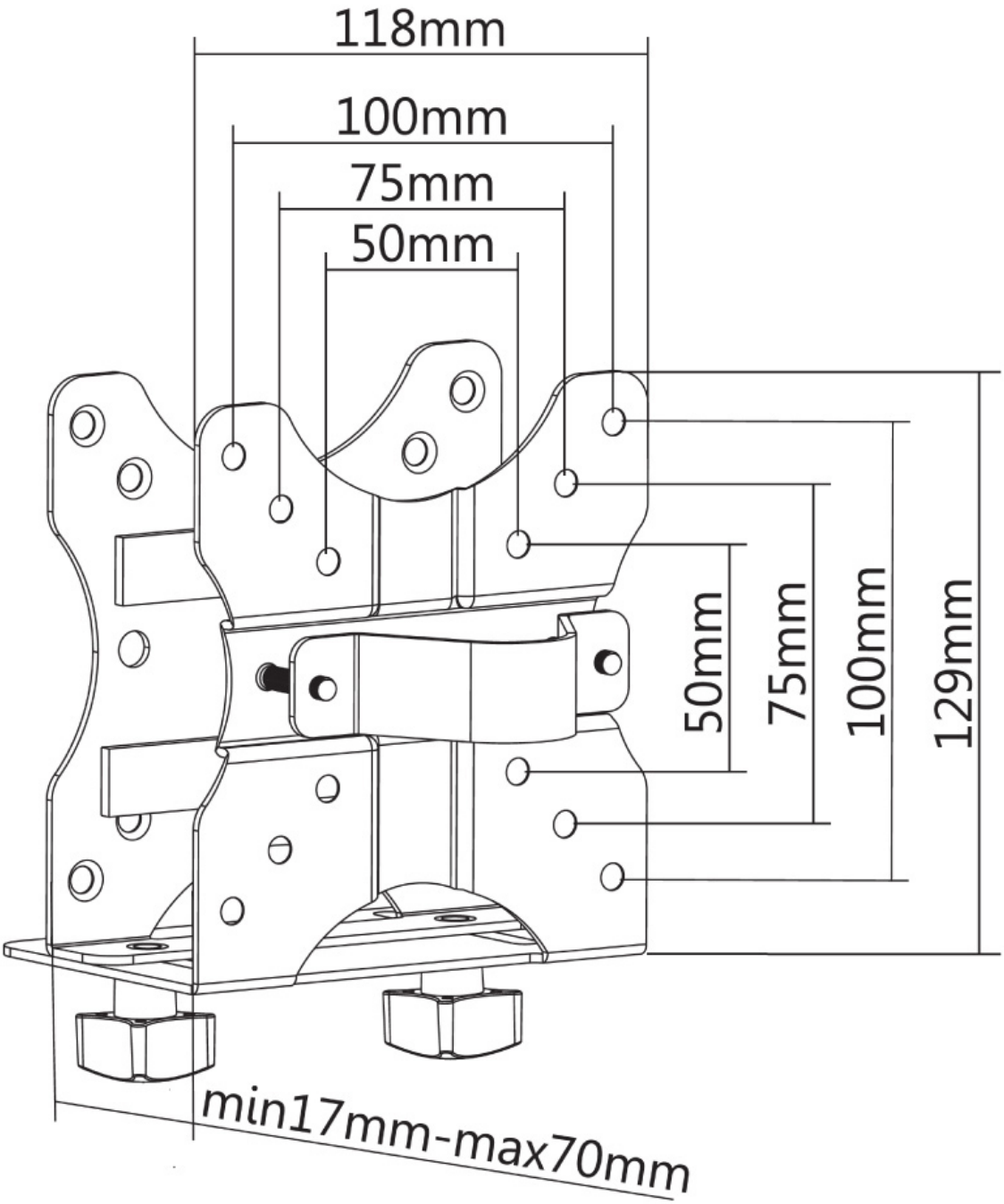

Neomounts